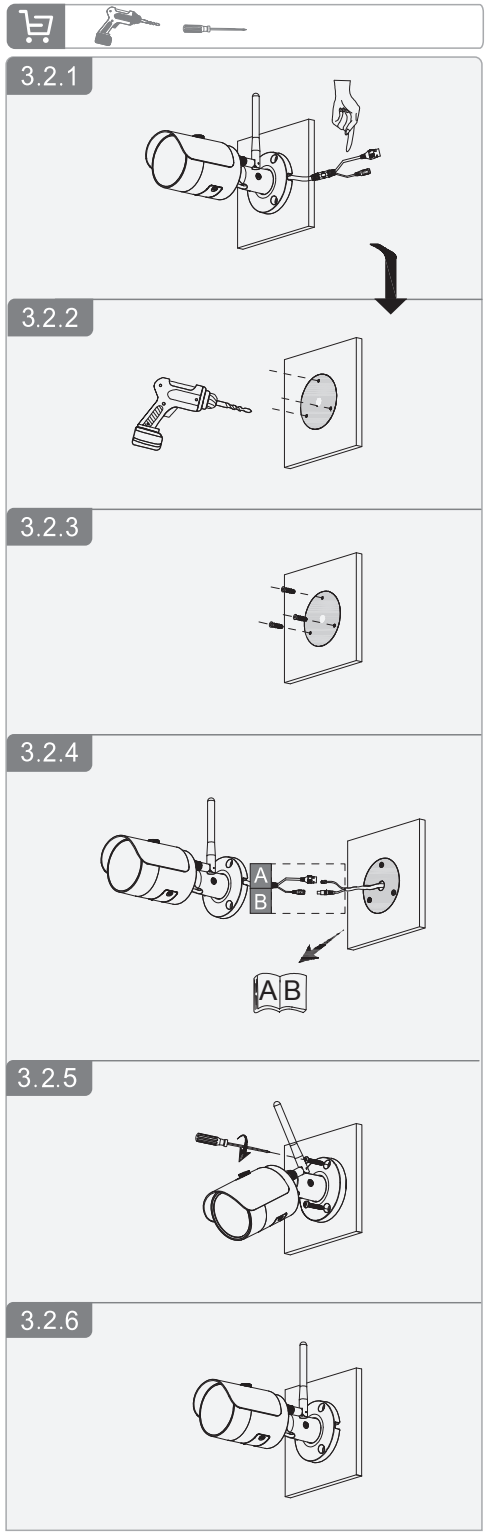
3.2.1
3.2.2
3.2.3
3.2.4
A
B
A B
3.2.5
3.2.6

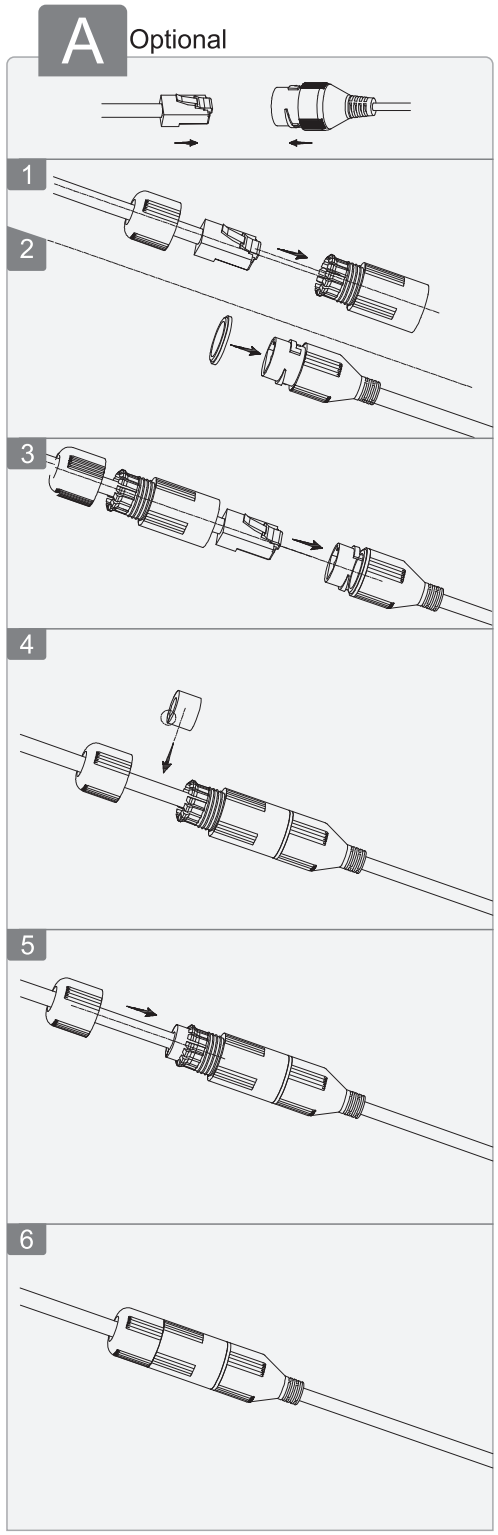
A
Optional
1
2
3
4
5
6

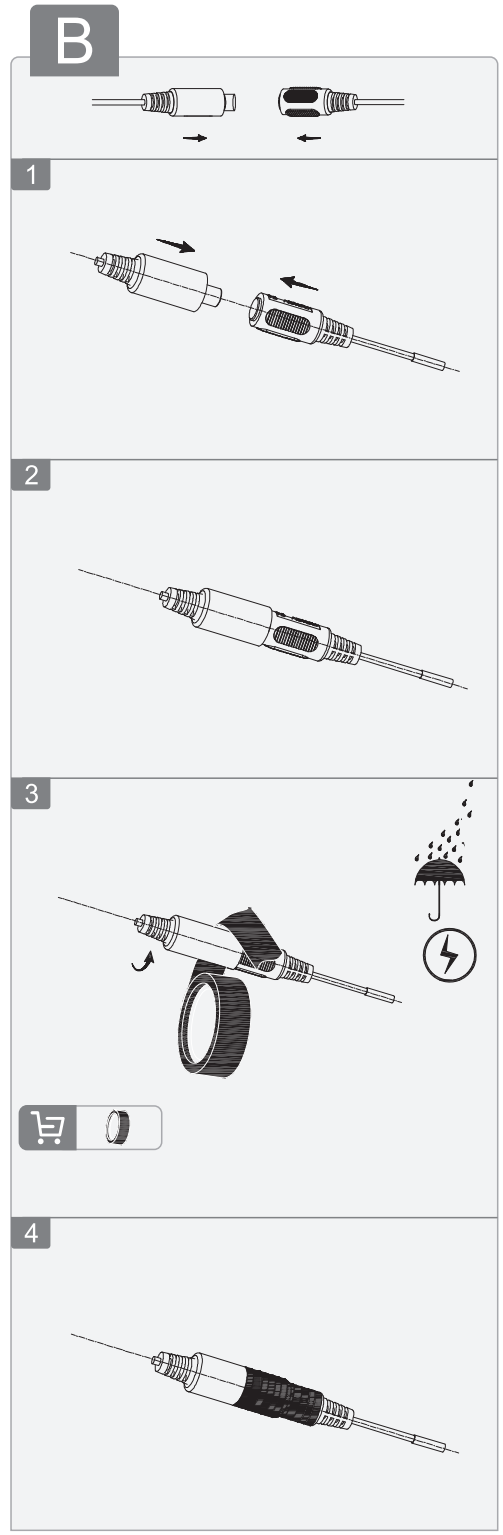
B
1
2
3
4

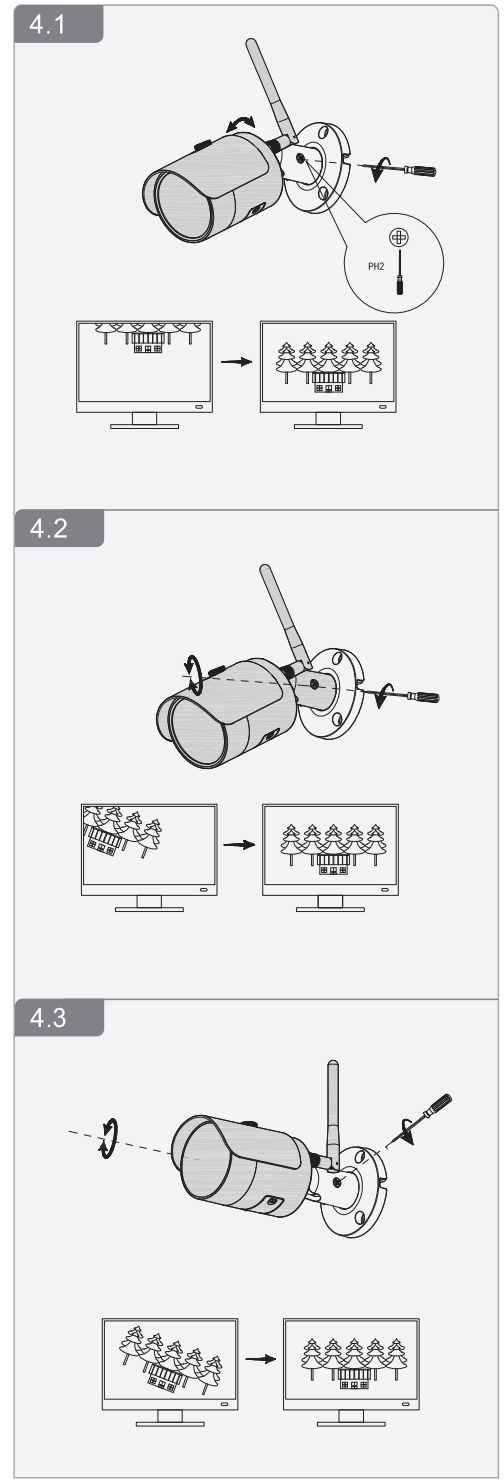
4.1
PH2
4.2
4.3

1.2.51.32.16497-000

Bullet
Wi-Fi Camera

Installation Guide
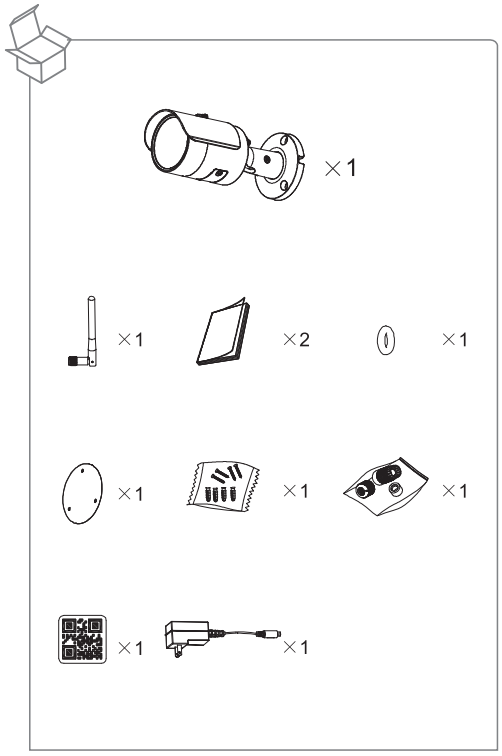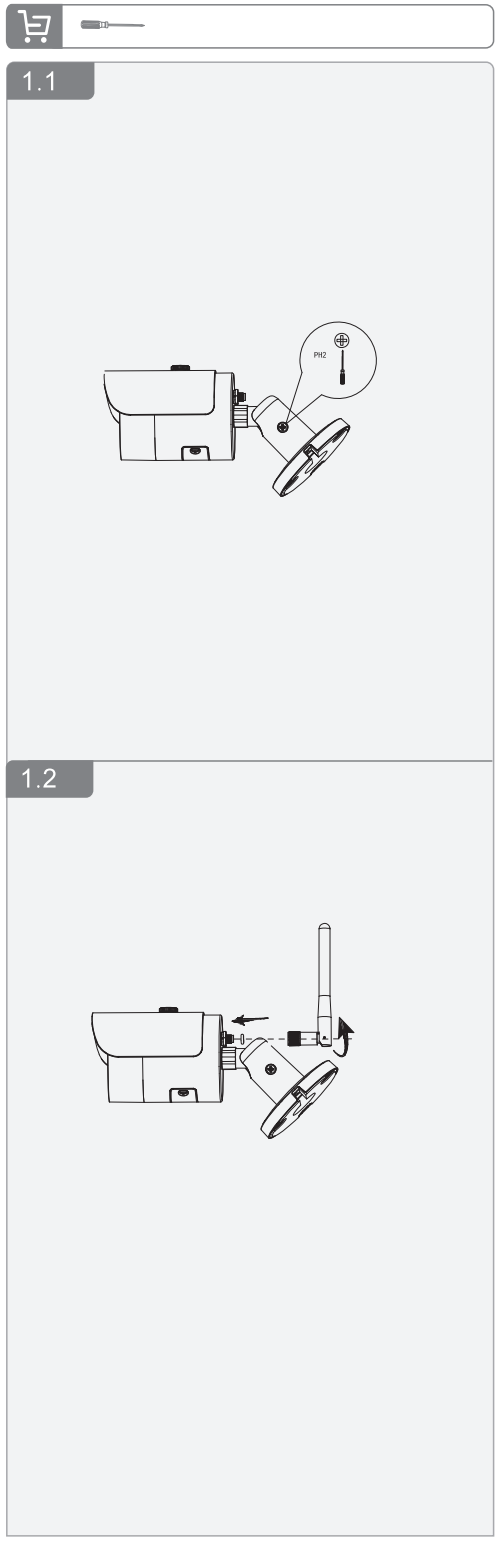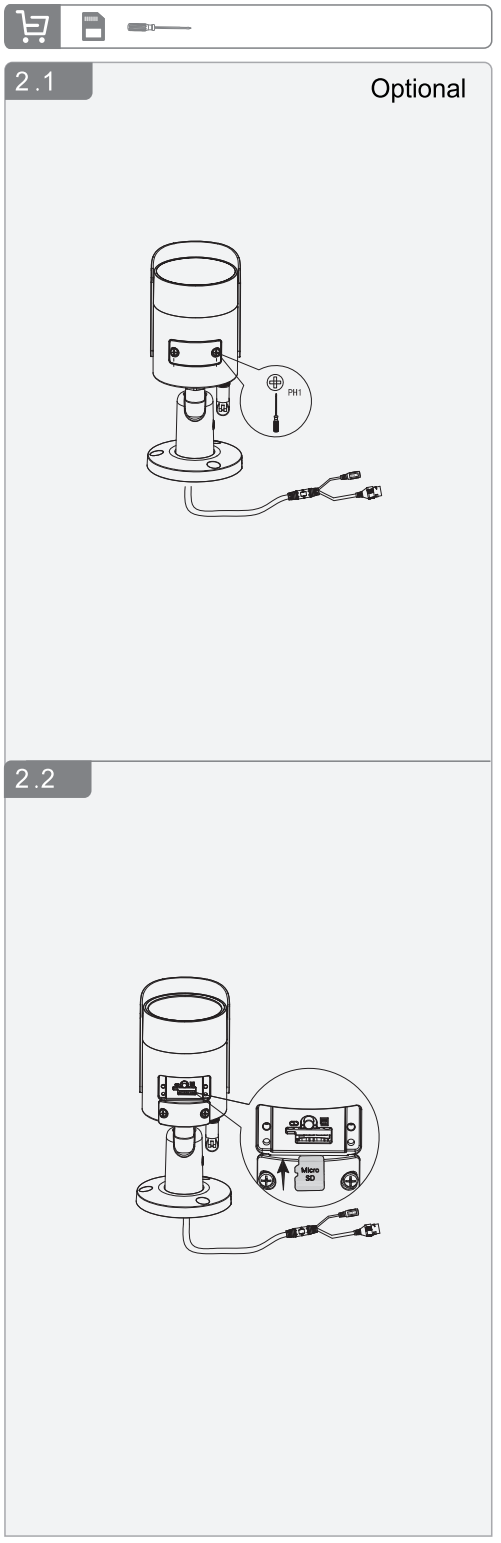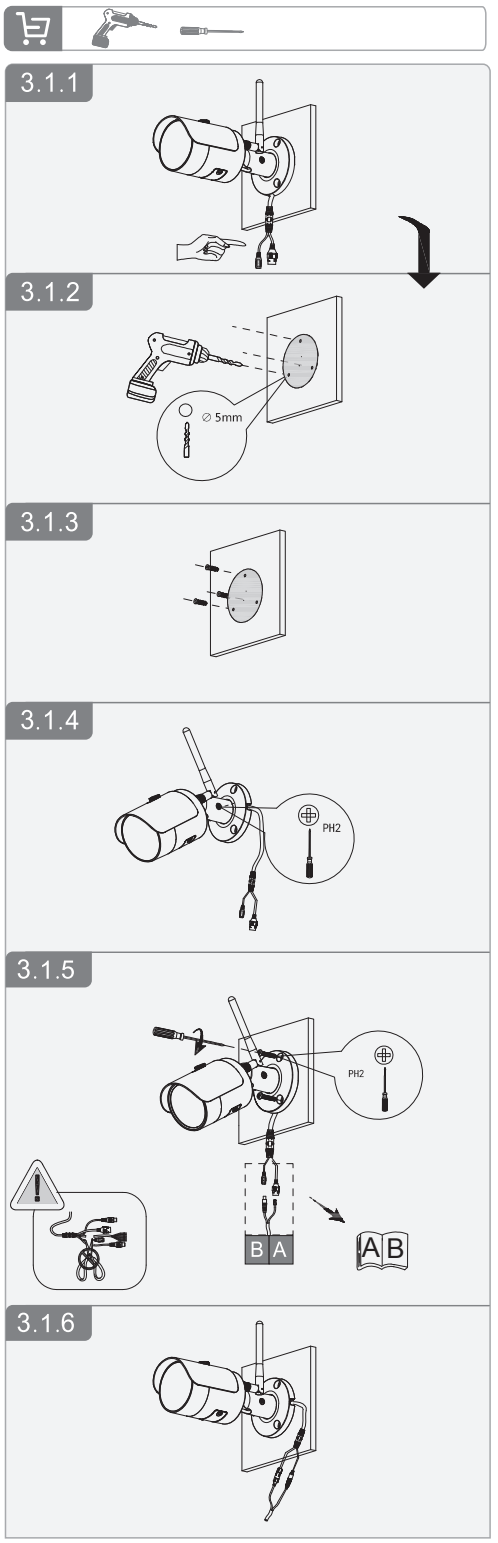
V1.0.0