mm [inch]

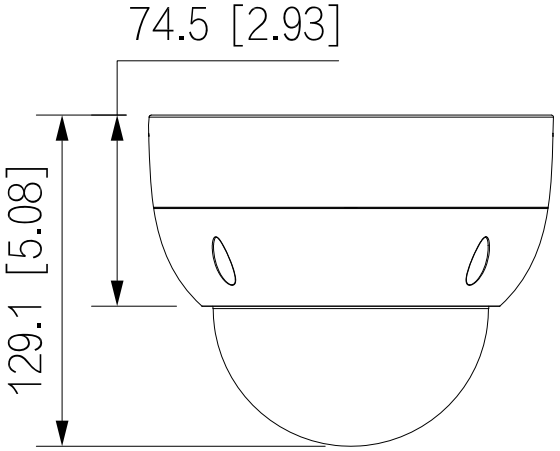
74.5 [2.93]
129.1 [5.08]

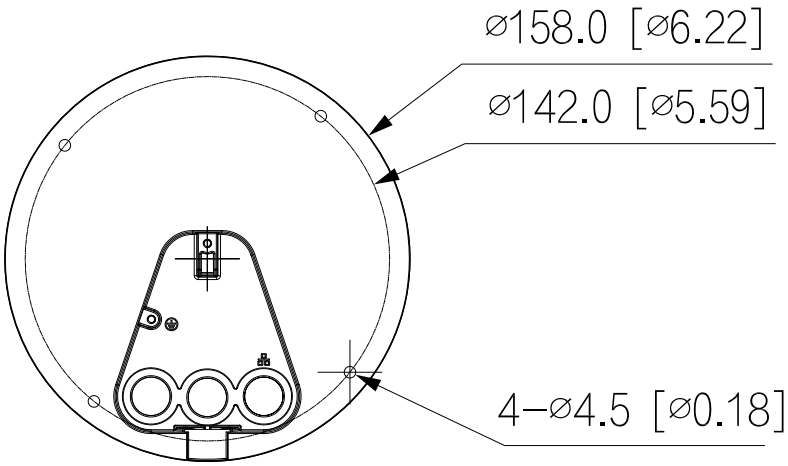
ø158.0 [ø6.22]
ø142.0 [ø5.59]
4−ø4.5 [ø0.18]

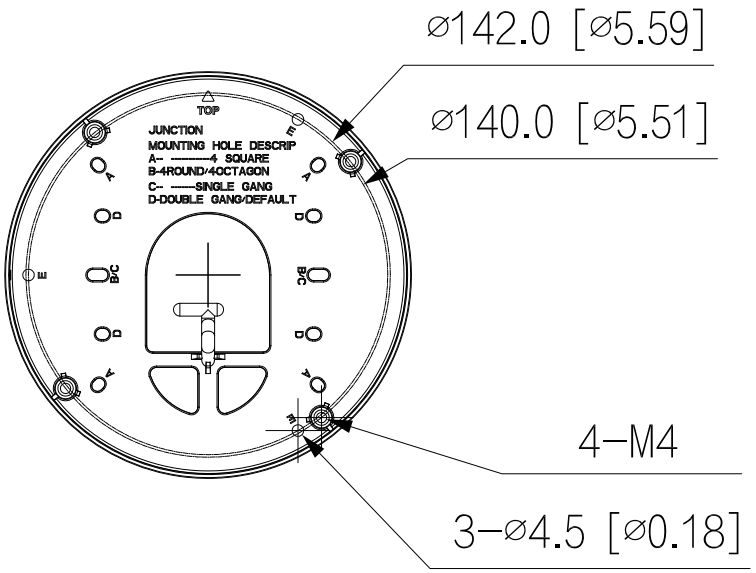
ø142.0 [ø5.59]
ø140.0 [ø5.51]
TOP
JUNCTION
MOUNTING HOLE DESCRIP
A-- ---------4 SQUARE
B-4ROUND/4OCTAGON
C-- -----SINGLE GANG
D-DOUBLE GANG/DEFAULT
4−M4
3−ø4.5 [ø0.18]